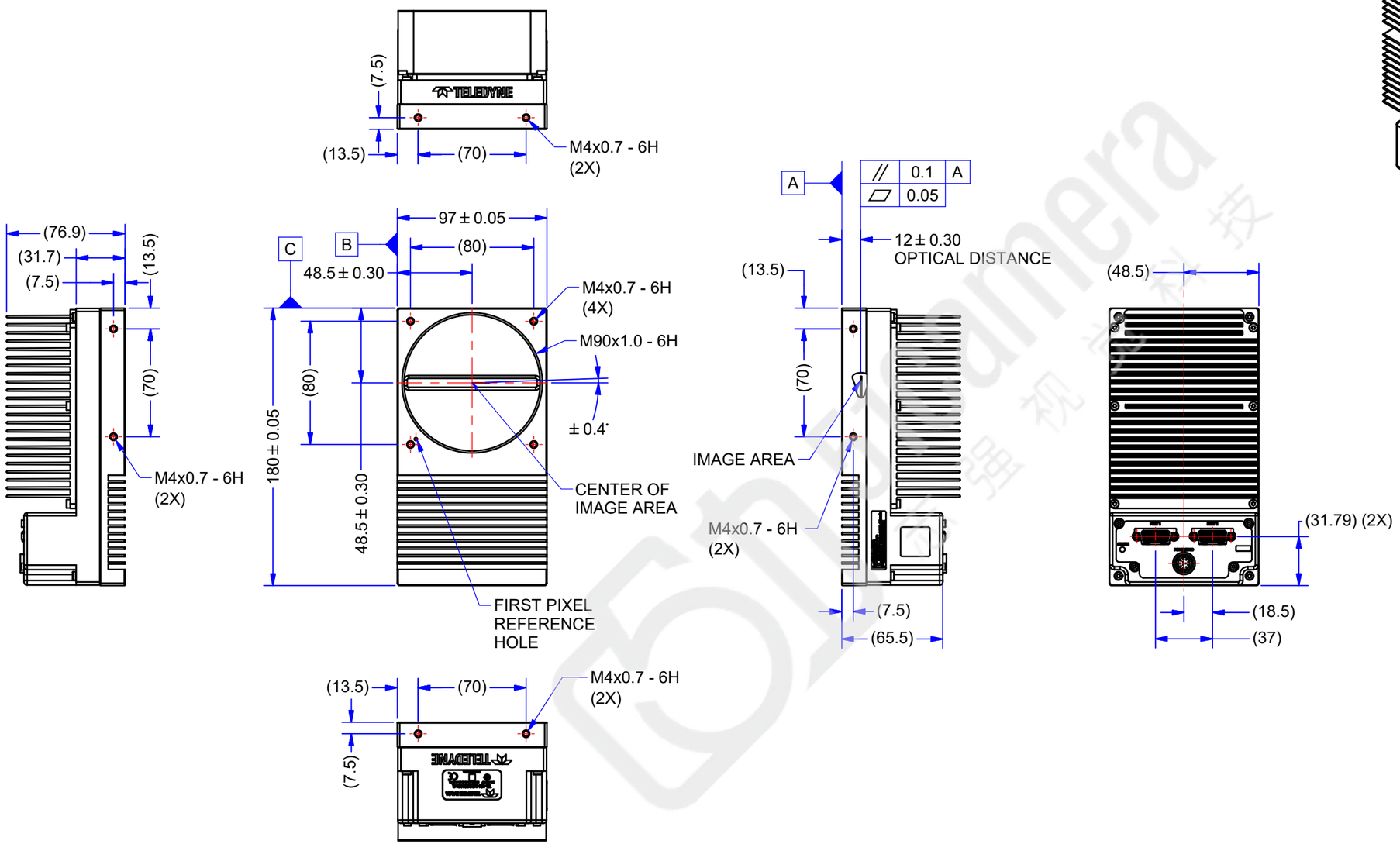

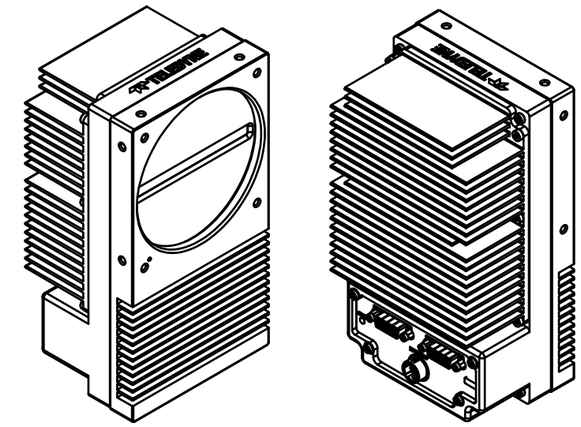

NOTES:
1. UNITS: MILLIMETERS.
2. IMAGE AREA IS ALIGNED TO DATUMS A B & C.

H2-HM-16K33T-	
H2-HM-16K100H-	
CAMERA P/N	

THIS DOCUMENT DOES NOT CONTAIN INFORMATION WHOSE EXPORT/TRANSFER/DISCLOSURE IS RESTRICTED BY THE CANADIAN EXPORT CONTROL REGULATION.

THIRD ANGLE PROJECTION

TELEDYNE DALSA
Everywhereyoulook™

605 McMurray Road
Waterloo, ON
CANADA, N2V 2E9
Phone: (519) 886-6000
Fax: (519) 886-8023
www.teledynedalsa.com

DATE	DWG NO.	REV
AUG 19/2024	03-129-25080	01

TITLE: 16K CUSTOMER DRAWING

APPLICATION/PROJECT: LINEA HS2

SHEET 1 OF 1