Mechanical Dimensions

Unit: mm
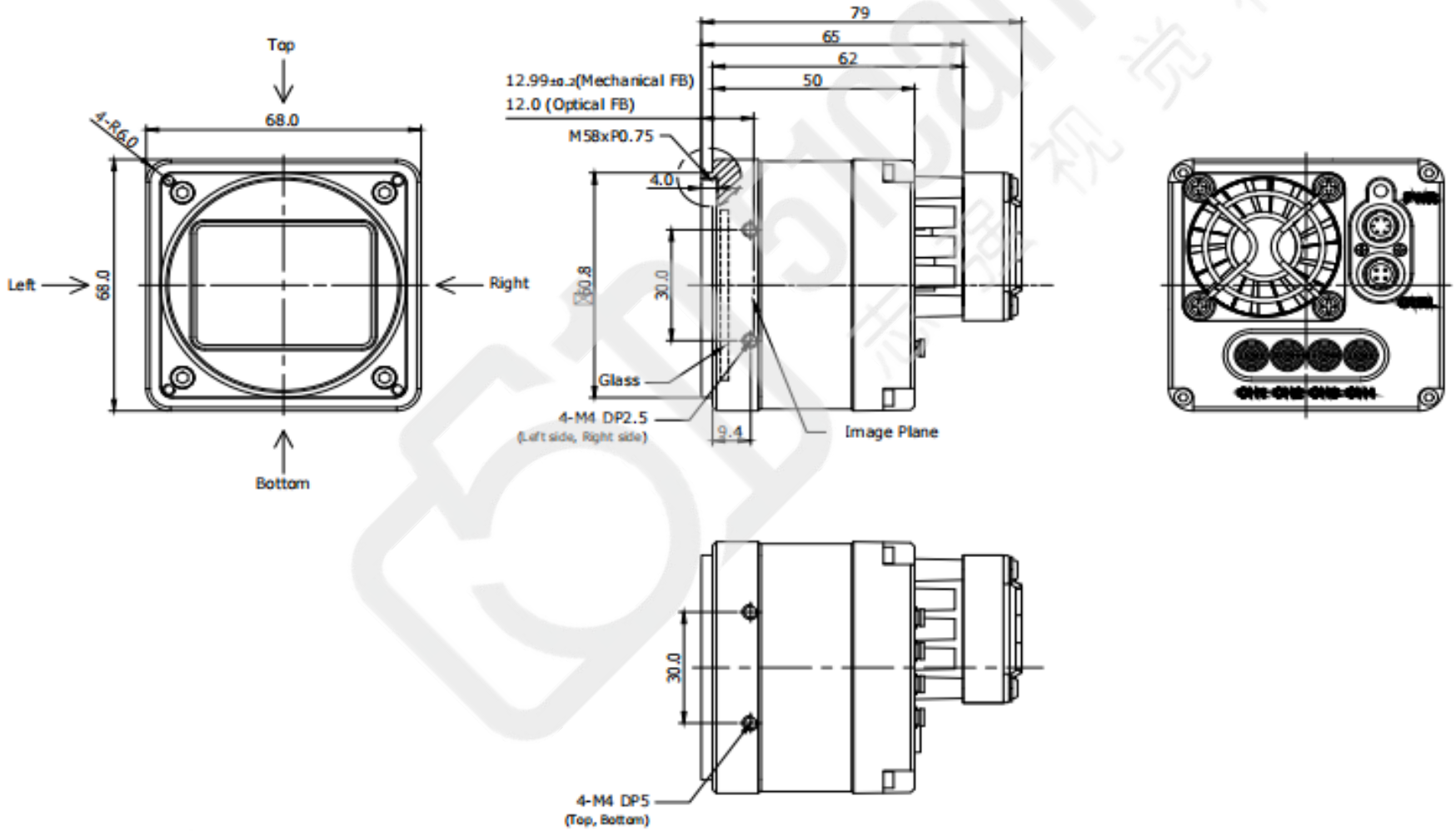
VC-51MX2 (FAN)