Mechanical Dimensions

Unit: mm

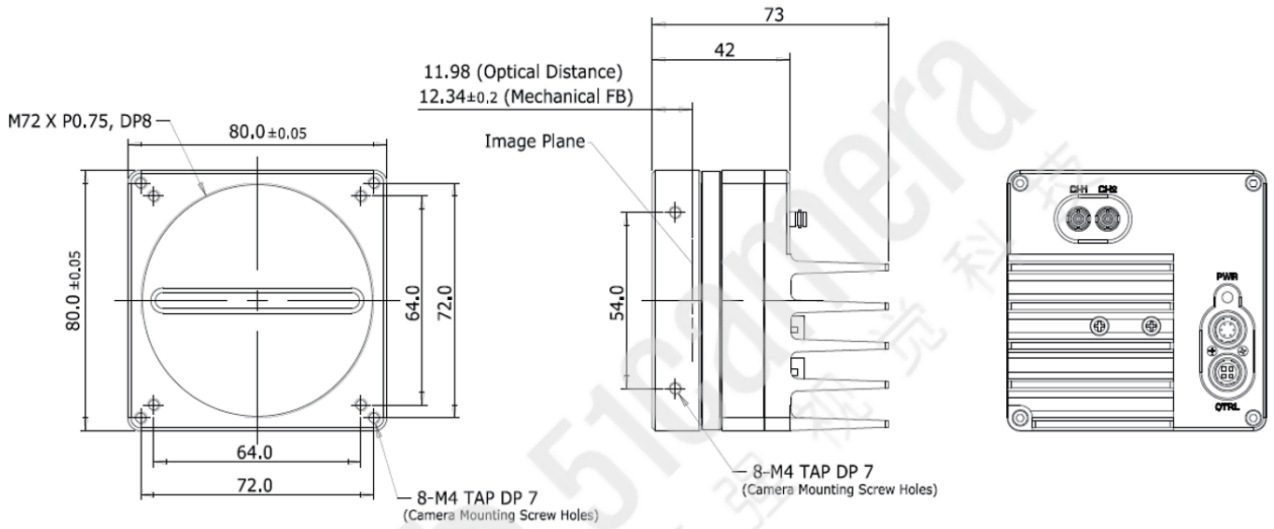

41-3, Burim-ro 170 beon-gil, Dongan-gu, Anyang-si, Gyeonggi-do, 14055 Republic of Korea
Tel +82-70-7011-6161 **Fax** +82-31-386-8631 **E-mail** vision@vieworks.com **Web** vision.vieworks.com

Copyright © 2024 Vieworks Co., Ltd. All rights reserved.
Information in this document may differ and is subject to change without notice.