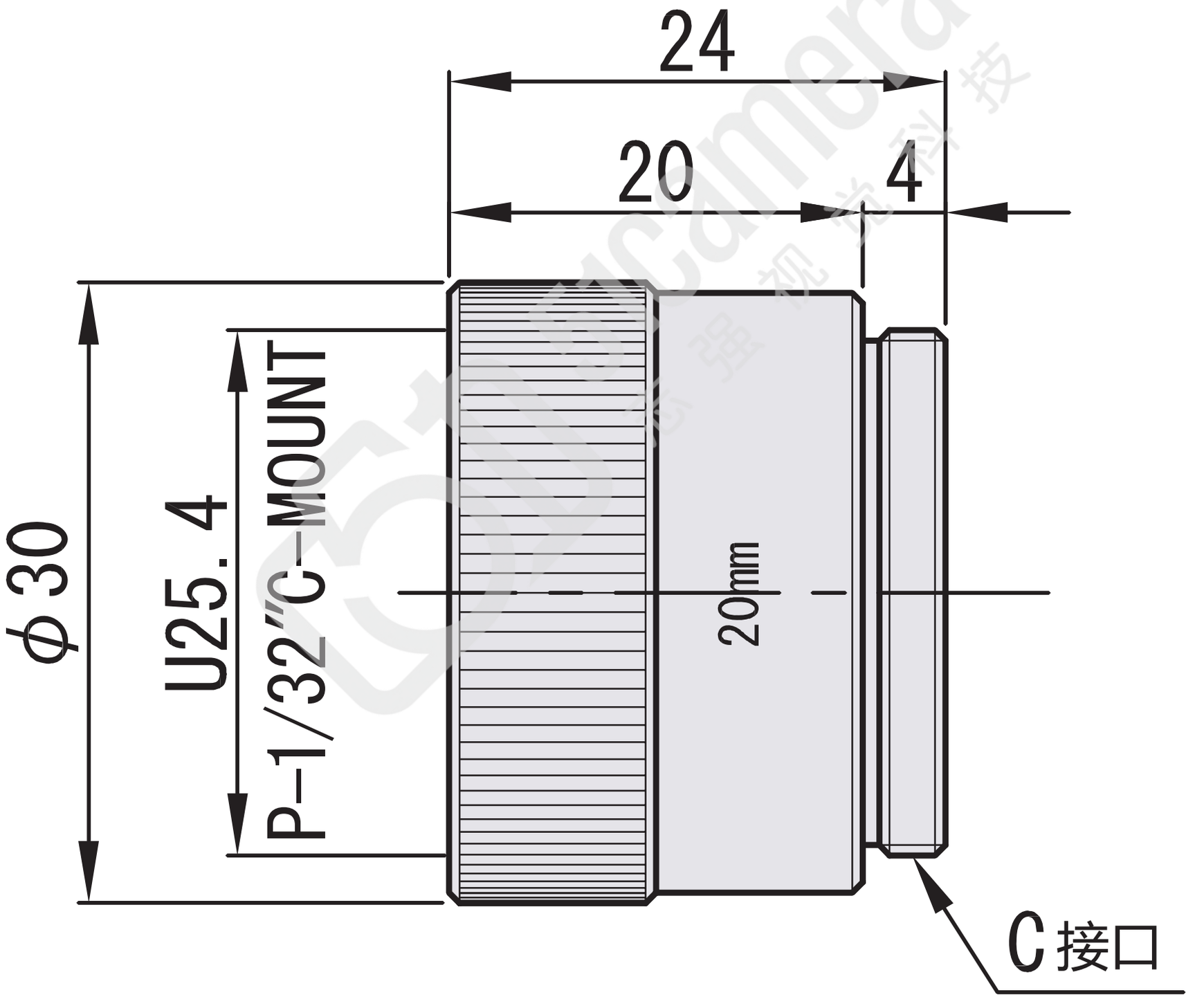OR-EXR20