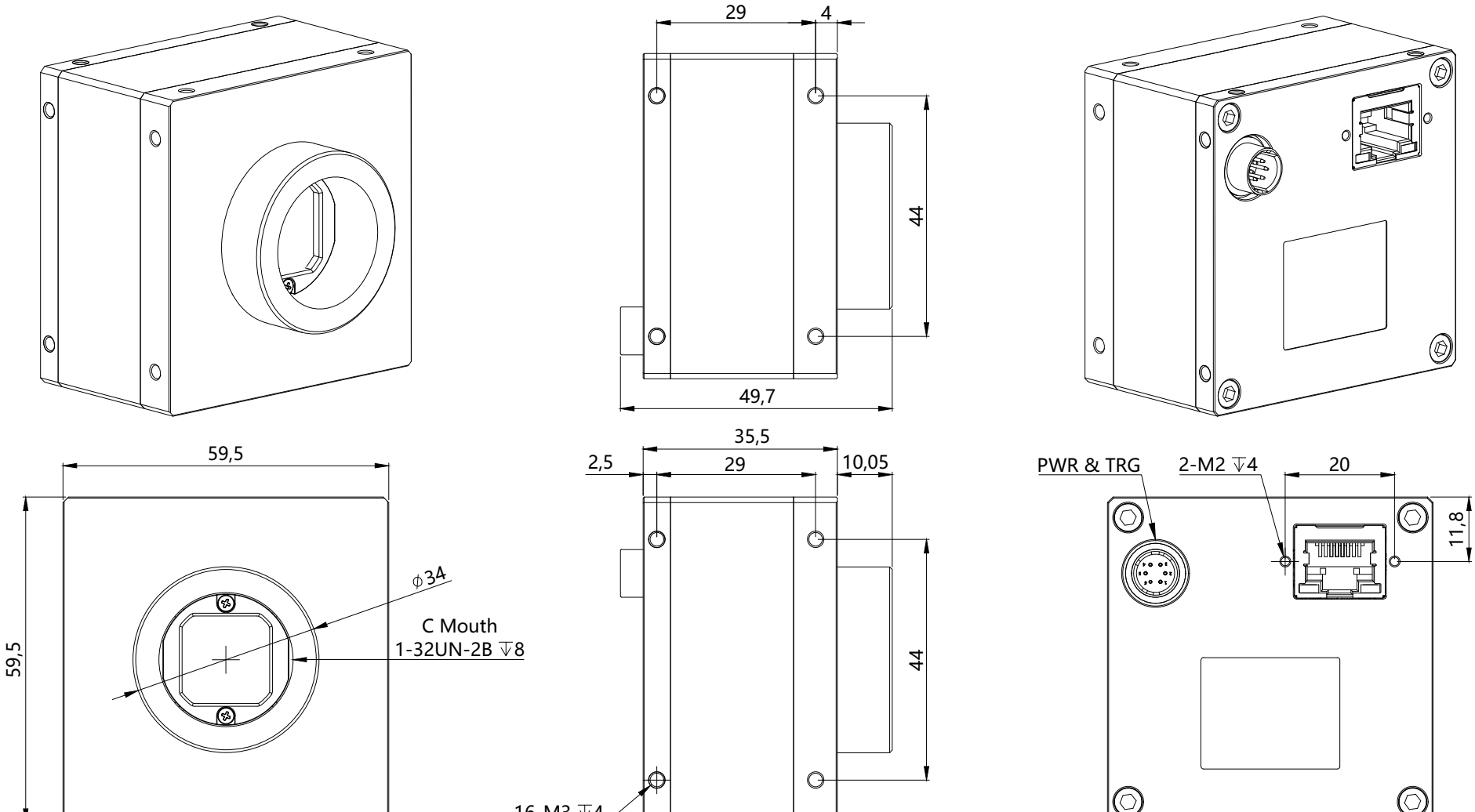

MV-GEC405U-T1-C