STRAIGHTNESS & FLATNESS TOLERANCE	CLASS	NOMINAL LENGTH					
		L ≤ 10	10 < L ≤ 30	30 < L ≤ 100	100 < L ≤ 300	300 < L ≤ 1000	1000 < L ≤ 3000
	H	±0.02	±0.05	±0.1	±0.2	±0.3	±0.4
	K	±0.05	±0.1	±0.2	±0.4	±0.6	±0.8

PERPENDICULARITY TOLERANCE	CLASS	NOMINAL LENGTH ON SHORTER SIDE			
		L ≤ 100	100 < L ≤ 300	300 < L ≤ 1000	1000 < L ≤ 3000
	H	±0.2	±0.3	±0.4	±0.5
	K	±0.4	±0.6	±0.8	±1.0

ANGLE TOLERANCE	CLASS	LENGTH OF SHORTER SIDE OF ANGLE				
		L ≤ 10	10 < L ≤ 50	50 < L ≤ 120	120 < L ≤ 400	400 < L
	f	±1°	±30' (±0.5°)	±20' (±0.333°)	±10' (±0.166°)	±5' (±0.083°)
	m					

ORIGINAL SHEET FORMAT SIZE : A4

CHAMFER TOLERANCE	CLASS	STANDARD DIMENSION RANGE					
		L < 0.2	0.2 ≤ L ≤ 0.5	0.5 < L ≤ 3	3 < L ≤ 6	6 < L
	f	IN DRW.	±0.1	±0.2	±0.5	±1.0
	m					

LENGTH TOLERANCE	CLASS	STANDARD DIMENSION RANGE						
		L < 0.2	0.2 ≤ L ≤ 6	6 < L ≤ 30	30 < L ≤ 120	120 < L ≤ 400	400 < L ≤ 1000	
	f	IN DRW.	±0.05	±0.1	±0.15	±0.2	±0.3	
	m		±0.1	±0.2	±0.3	±0.5	±0.8	

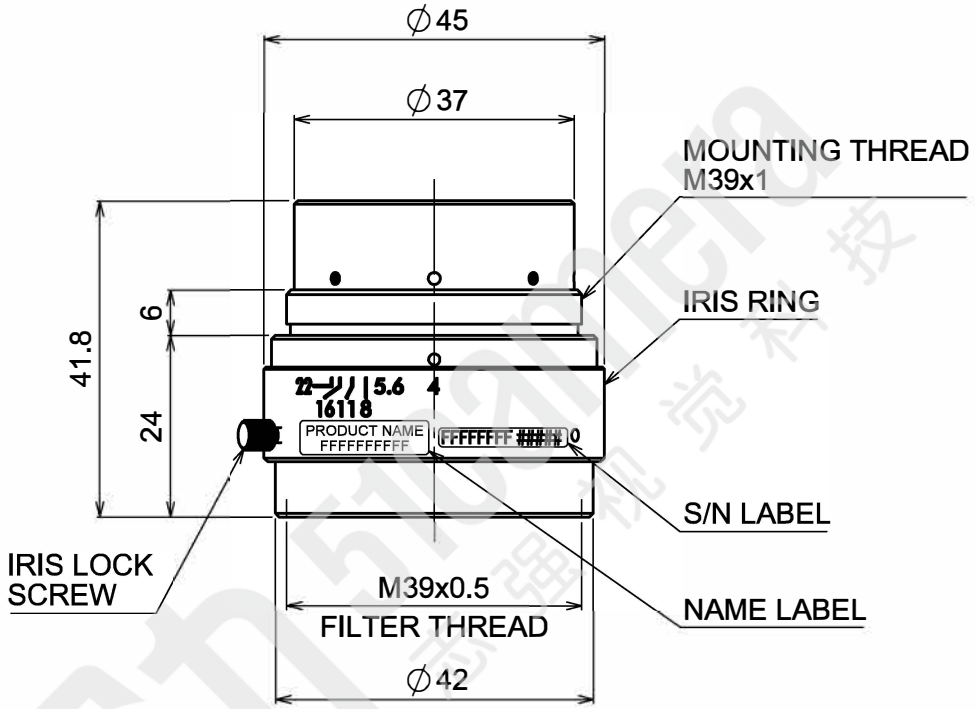

FOCAL LENGTH : 60mm

Fno : 4 - 22

MARK	COM-REV	DATE(YMD)	CHANGE	SIGNATURE
	A-001	2020.Nov.16	NEW	-

DESIGNED	DRAWN	CHECKED	APPROVED
G.Ogawa	G.Ogawa	モリテックス '20.11.27 茅野	モリテックス '20.11.27 山中

FINISH: BLACK ANODIZING

SURFACE: ——

MATERIAL: ALUMINUM ALLOY

CHAMFER: ——

TOLERANCE CLASS: ——

SCALE: 1:1

UNIT:mm

MORITEX
Vision Creating Value

MODEL NAME: ML-6040-67M39

PART NAME: OUTLINE DRAWING

DRAWING NO.: A23873A0100201A-001

SHEET: 1/1

OLD DRAWING NO.