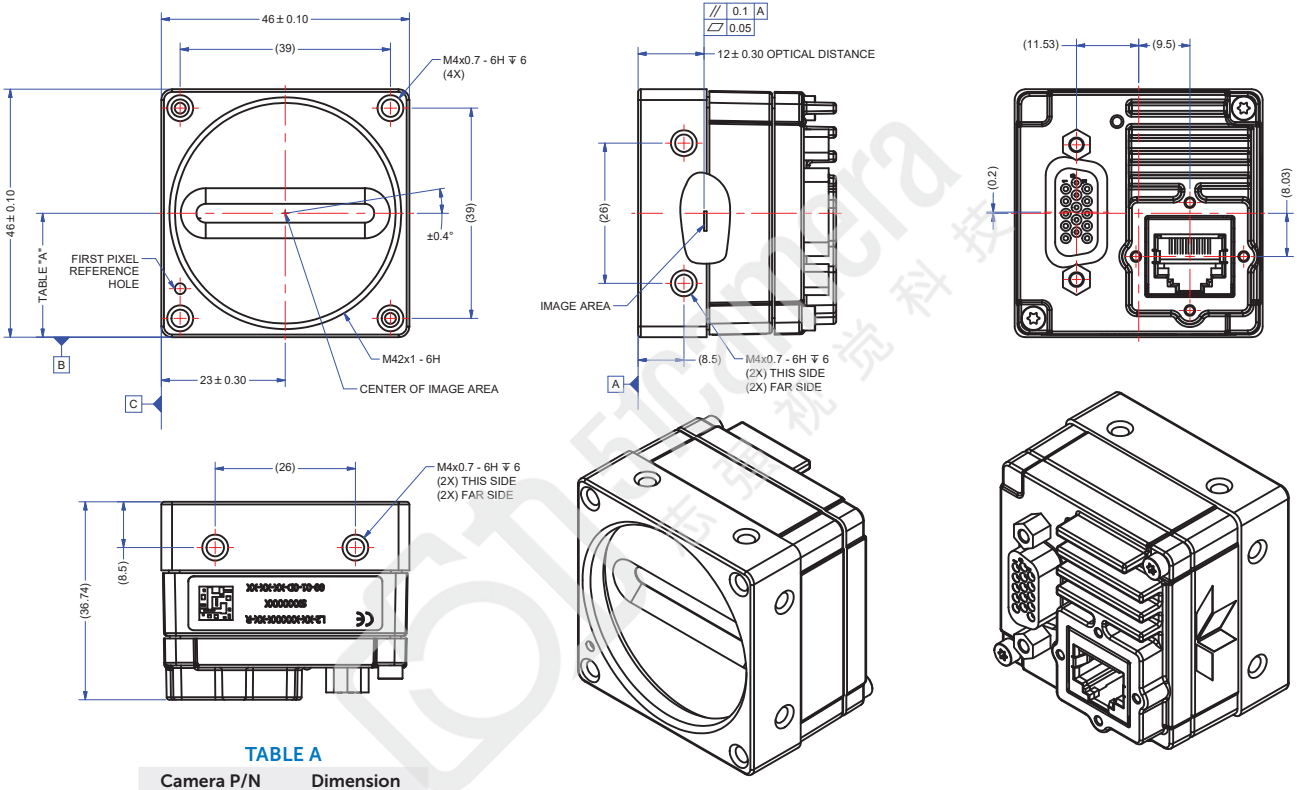

TABLE A

Camera P/N	Dimension
L2-XX-02KXXX-	23.2 ± 0.30
L2-XX-04KXXX-	23.0 ± 0.30
8K SR	22.96 ± 0.30