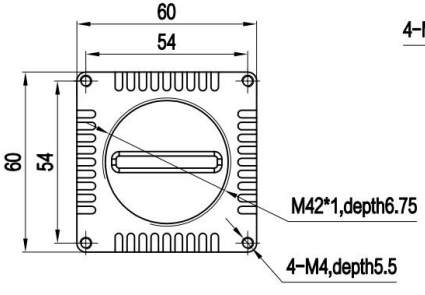
60
54
60
54
M42*1,depth6.75
4-M4,depth5.5

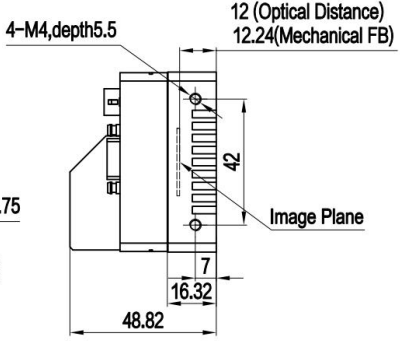
4-M4,depth5.5
12 (Optical Distance)
12.24(Mechanical FB)
42
Image Plane
7
16.32
48.82

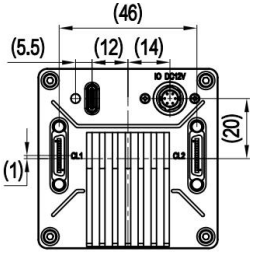
(46)
(5.5)
(12)
(14)
(20)
(1)

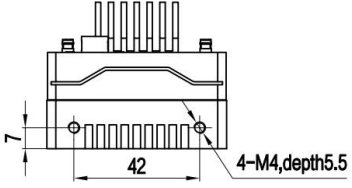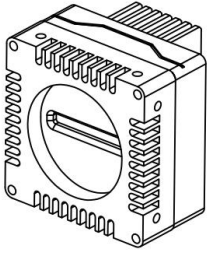
7
42
4-M4,depth5.5