机械尺寸

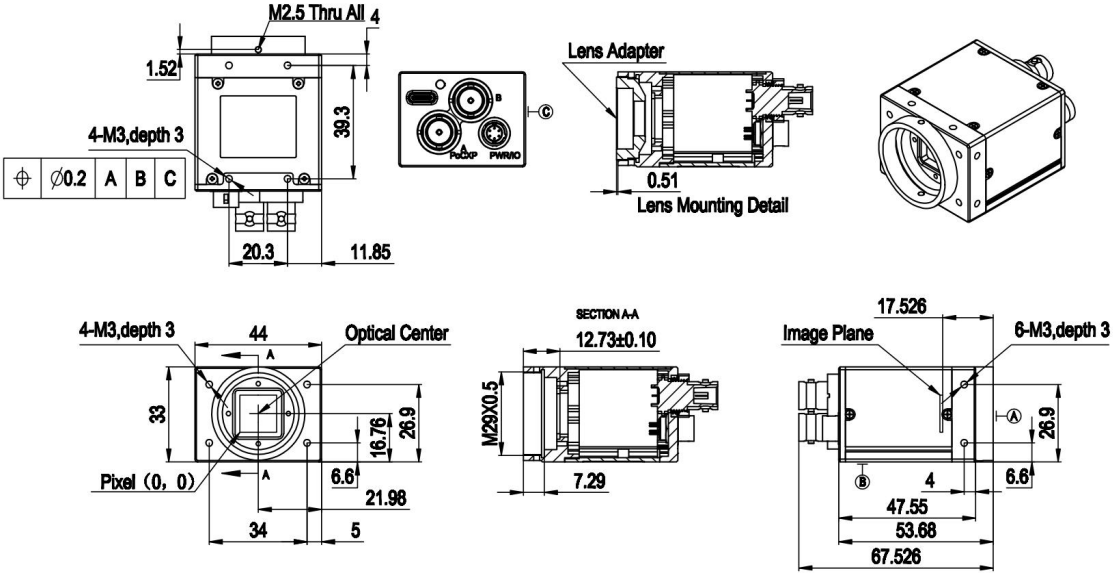
M2.5 Thru All
4
1.52
39.3
4-M3,depth 3
⌖ ∅0.2 A B C
20.3
11.85
Lens Adapter
0.51
Lens Mounting Detail
4-M3,depth 3
44
Optical Center
33
16.76
26.9
Pixel（0，0）
6.6
21.98
34
5
SECTION A-A
12.73±0.10
M29X0.5
7.29
17.526
Image Plane
6-M3,depth 3
26.9
4
6.6
47.55
53.68
67.526