机械尺寸

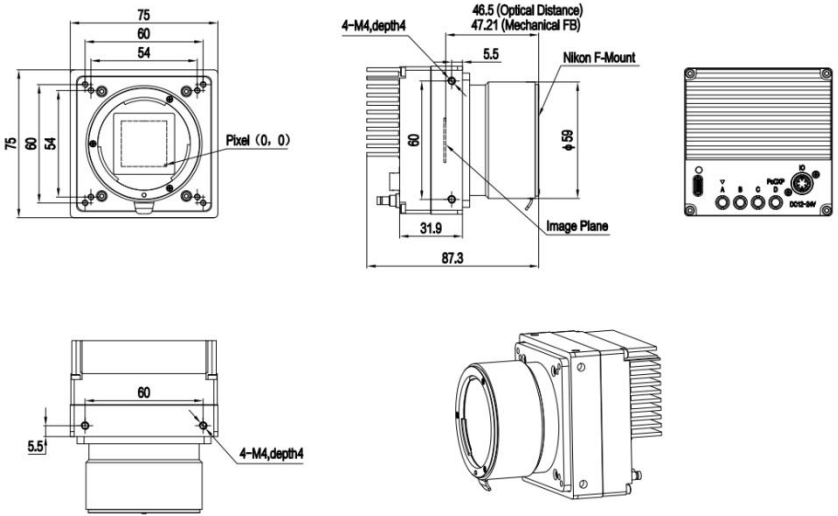
75
60
54
75
60
54
Pixel (0, 0)
46.5 (Optical Distance)
47.21 (Mechanical FB)
4-M4,depth4
5.5
Nikon F-Mount
60
ϕ59
31.9
Image Plane
87.3
PoCP
DC12-24V
60
5.5
4-M4,depth4