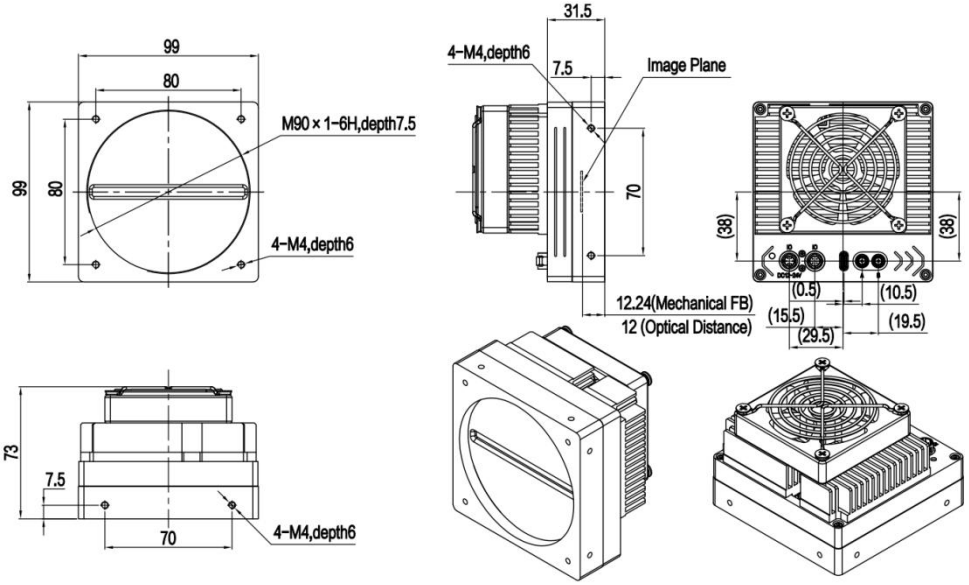
99
80
M90 × 1-6H,depth7.5
99
80
4-M4,depth6
31.5
4-M4,depth6
7.5
Image Plane
70
12.24(Mechanical FB)
12 (Optical Distance)
(38)
(38)
(0.5)
(10.5)
(15.5)
(29.5)
(19.5)
73
7.5
70
4-M4,depth6