Dimensions

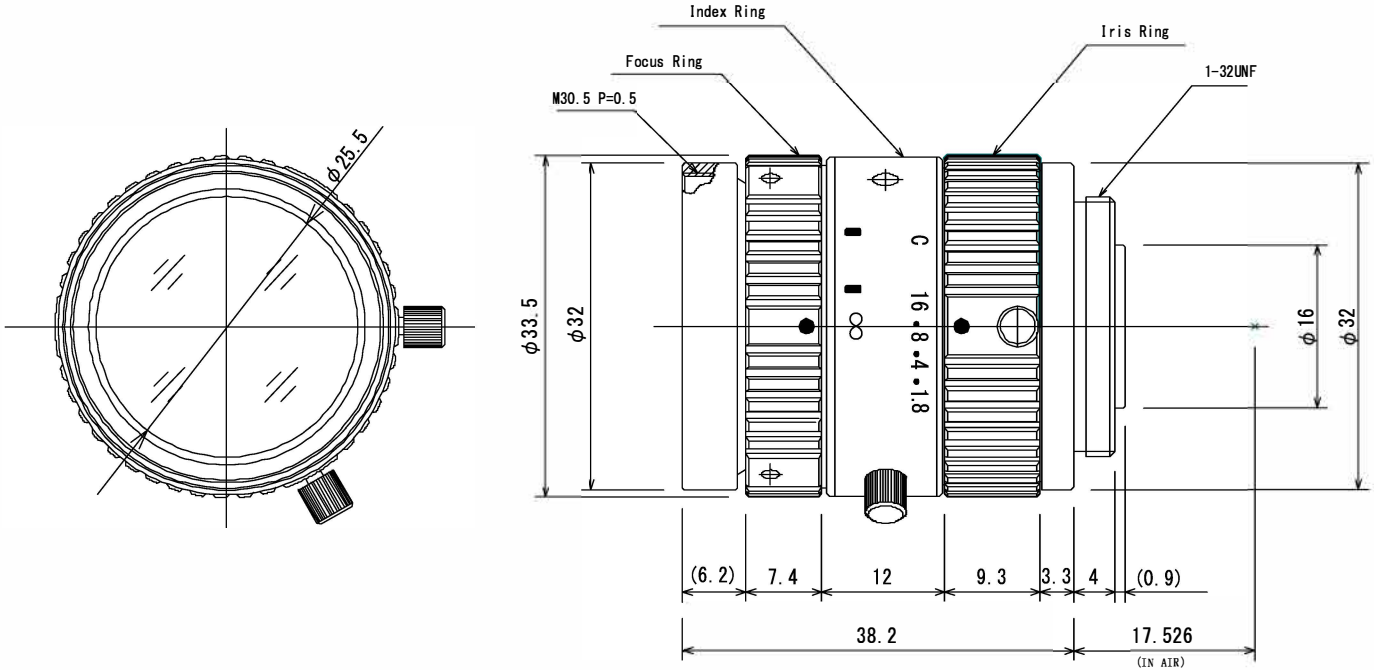
Index Ring
Iris Ring
Focus Ring
1-32UNF
M30.5 P=0.5
φ25.5
φ33.5
φ32
C
16 • 8 • 4 • 1.8
φ16
φ32
(6.2)
7.4
12
9.3
3.3
4
(0.9)
38.2
17.526
(IN AIR)