EXCB2-25-3

Units: mm

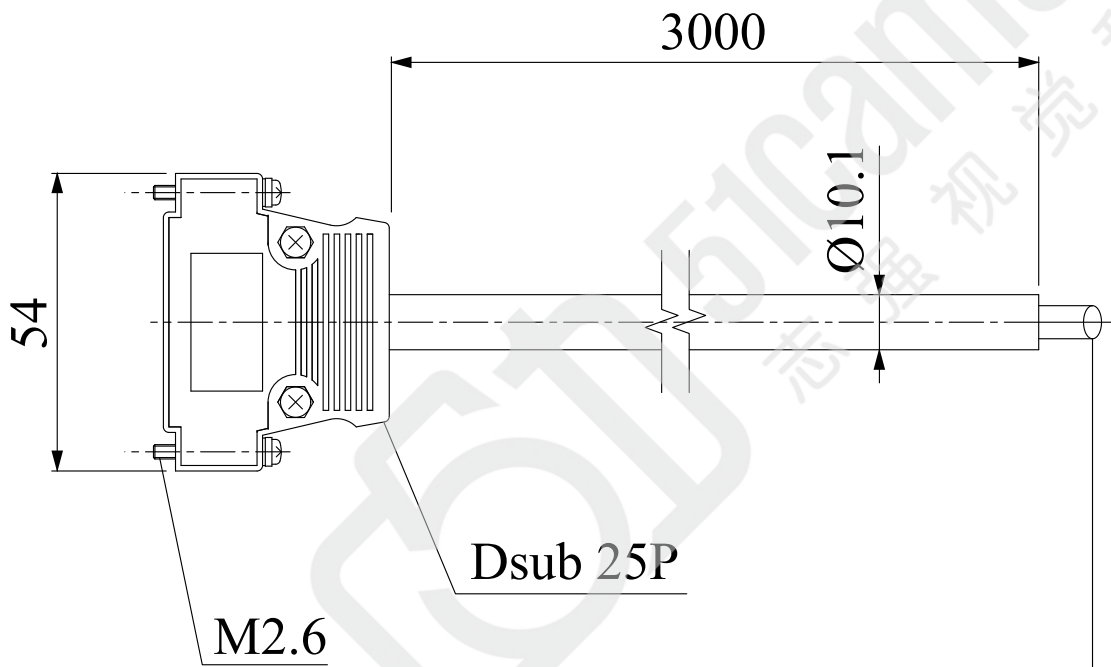

1. Black
2. White
3. Red
4. Green
5. Yellow
6. Brown
7. Blue
8. Purple
9. Gray
10. Pink
11. White/Black
12. Red/Black
13. Green/Black
14. Yellow/Black
15. Brown/Black
16. Blue/Black
17. Purple/Black
18. Gray/Black
19. Pink/Black
20. Light Green/Black
21. Black/White
22. Red/White
23. Green/White
24. Yellow/White
25. Brown/White
Not connected (Blue/White)
Not connected (Purple/White)
Not connected (Gray/White)
Not connected (Pink/White)
Not connected (Light Green/White)
Shield ground

Copyright(c) 2008 CCS Inc. All rights reserved. Reproduction or photocopy without permission is prohibited.

CCS Inc.