L42-25

Third Angle Projection Units: mm

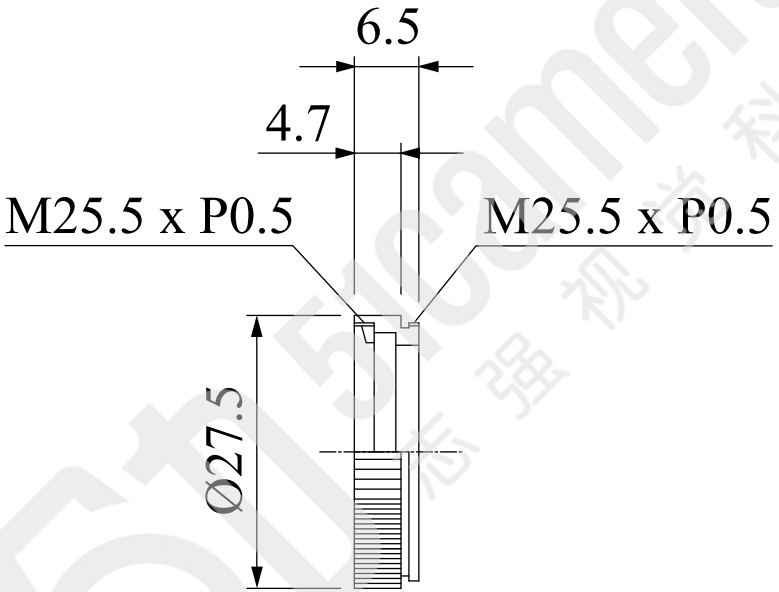

Copyright(c) 2008 CCS Inc. All rights reserved. Reproduction or photocopy without permission is prohibited.

CCS Inc.