LNSD-2200RD-HU

Model Name	LNSD-2200RD-HU
LED Color	Red
Input Voltage	DC24V(max.)
Power Consumption	222W(max.)
Weight	2960g
Input Connector	ELP-02V x 1 (～1200㎜) ELP-02V x 2 (1300㎜～)
Polarity & Signal	1: (+)、2: (-)

Unit: mm

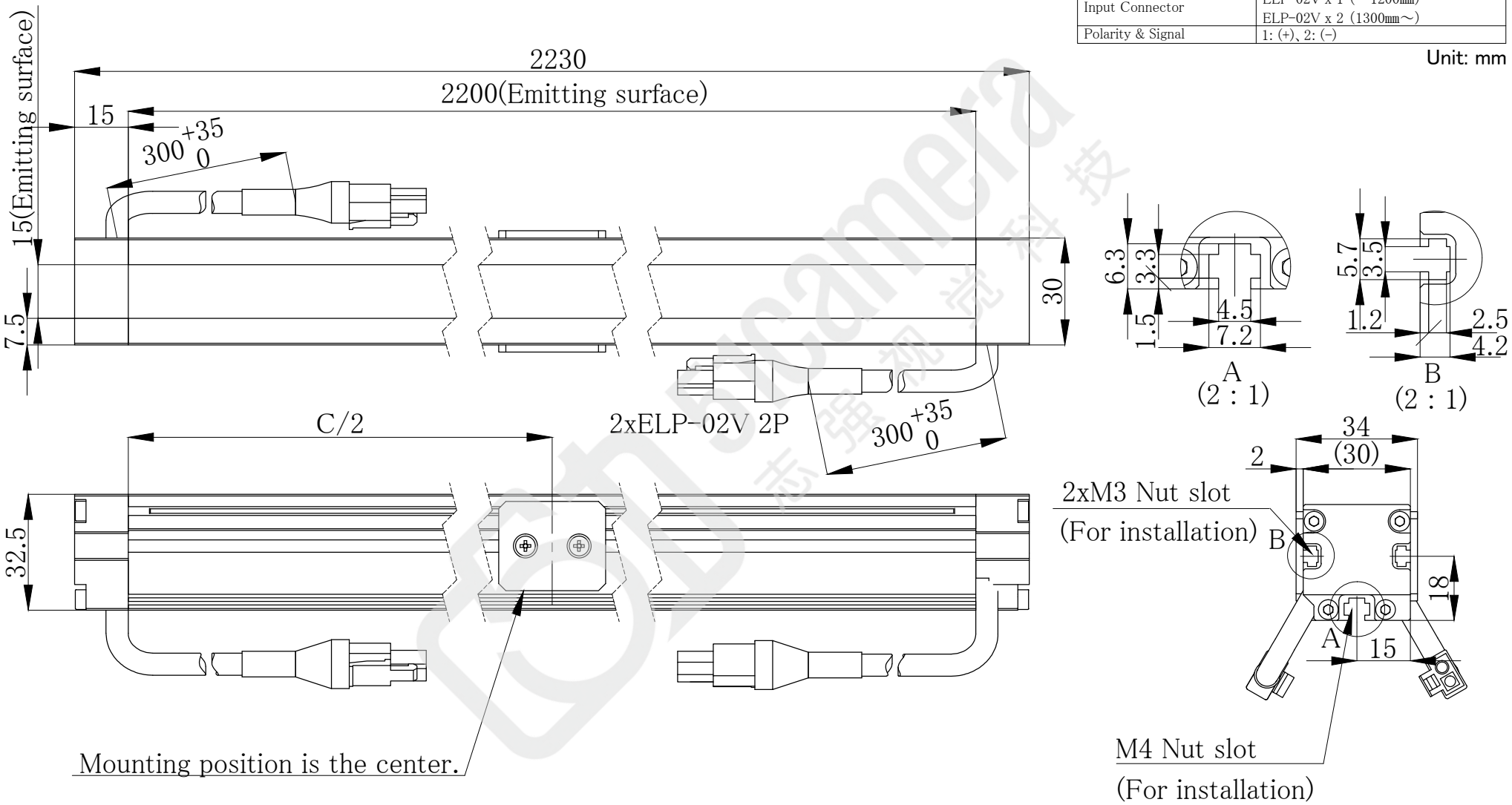

Copyright(C) 2014 CCS Inc. All rights reserved. Reproduction or photocopy without permission is prohibited.

CCS Inc.