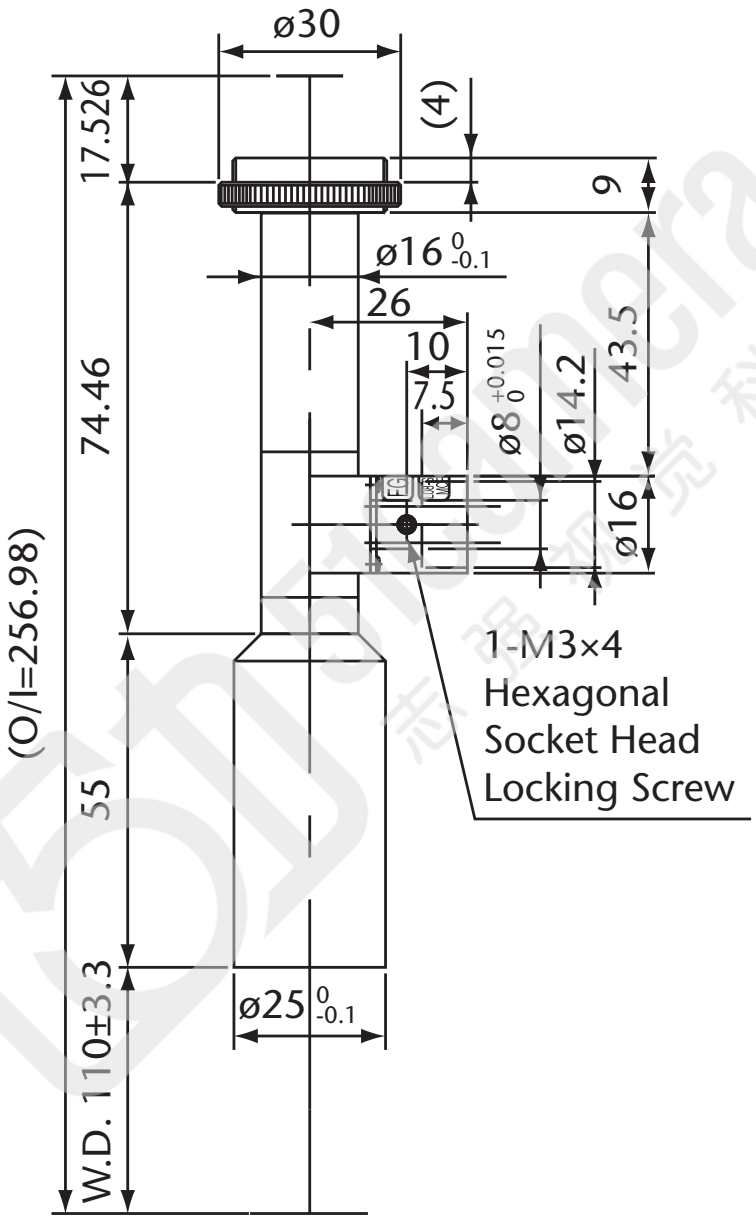


Model Name : MML08-ST110D
SCHOTT MORITEX Corporation