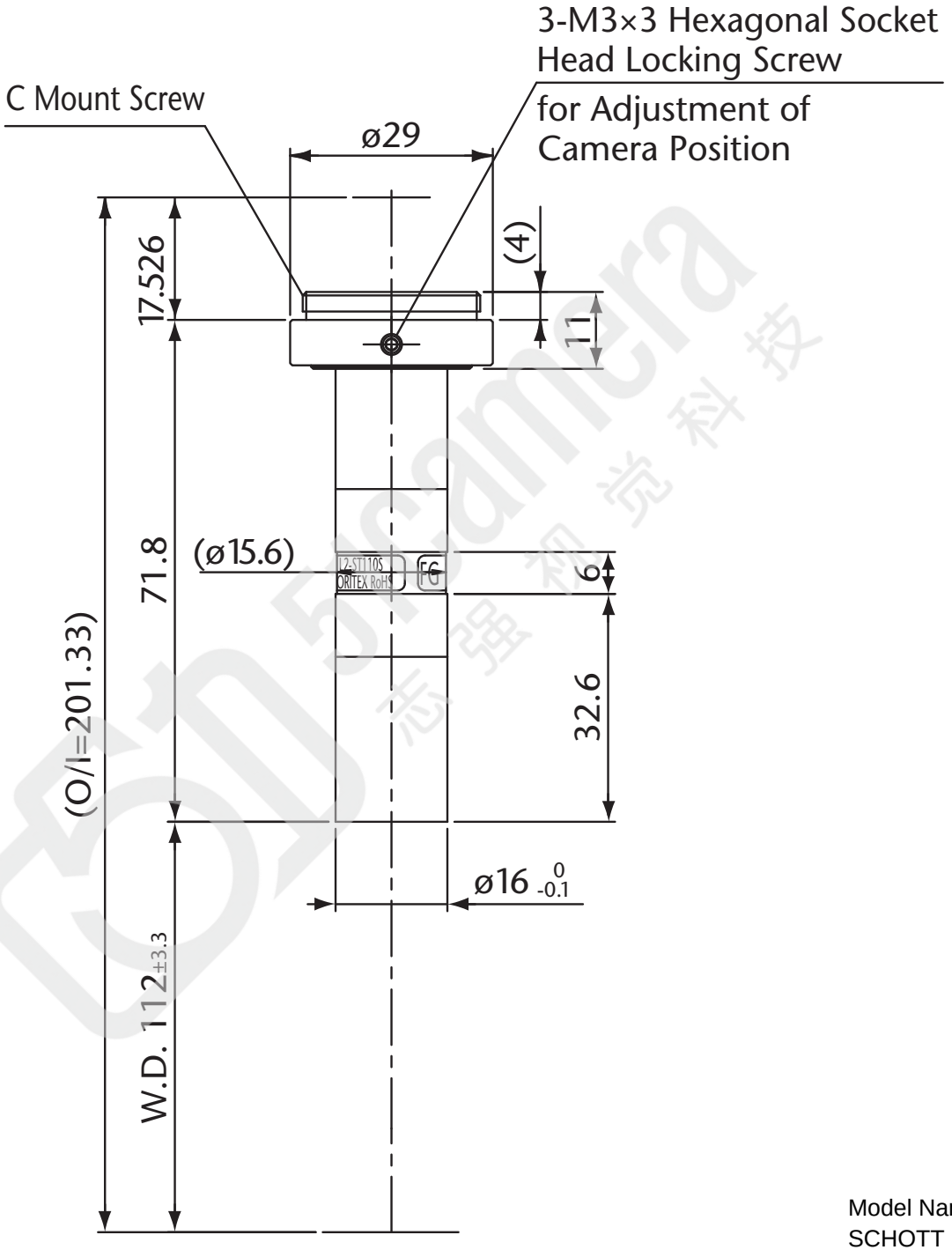

Model Name : MML2-ST110S
SCHOTT MORITEX Corporation