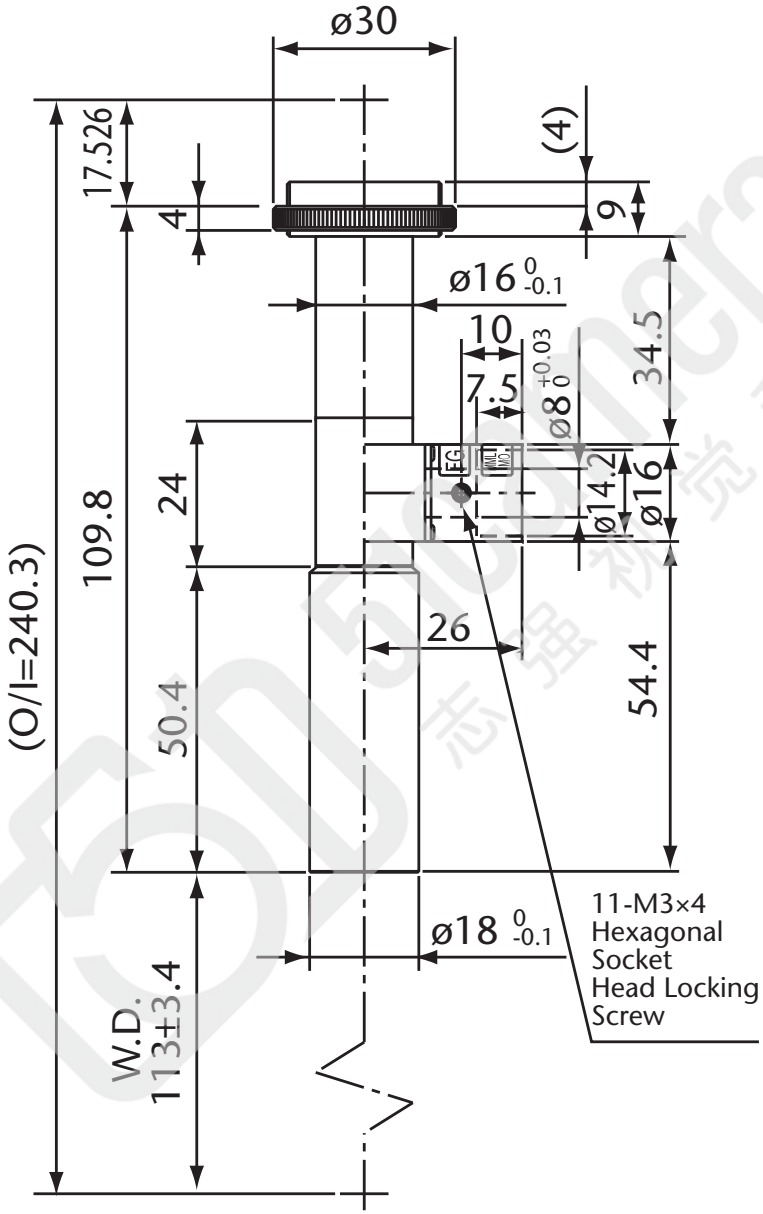

Model Name : MML1-ST110D
SCHOTT MORITEX Corporation