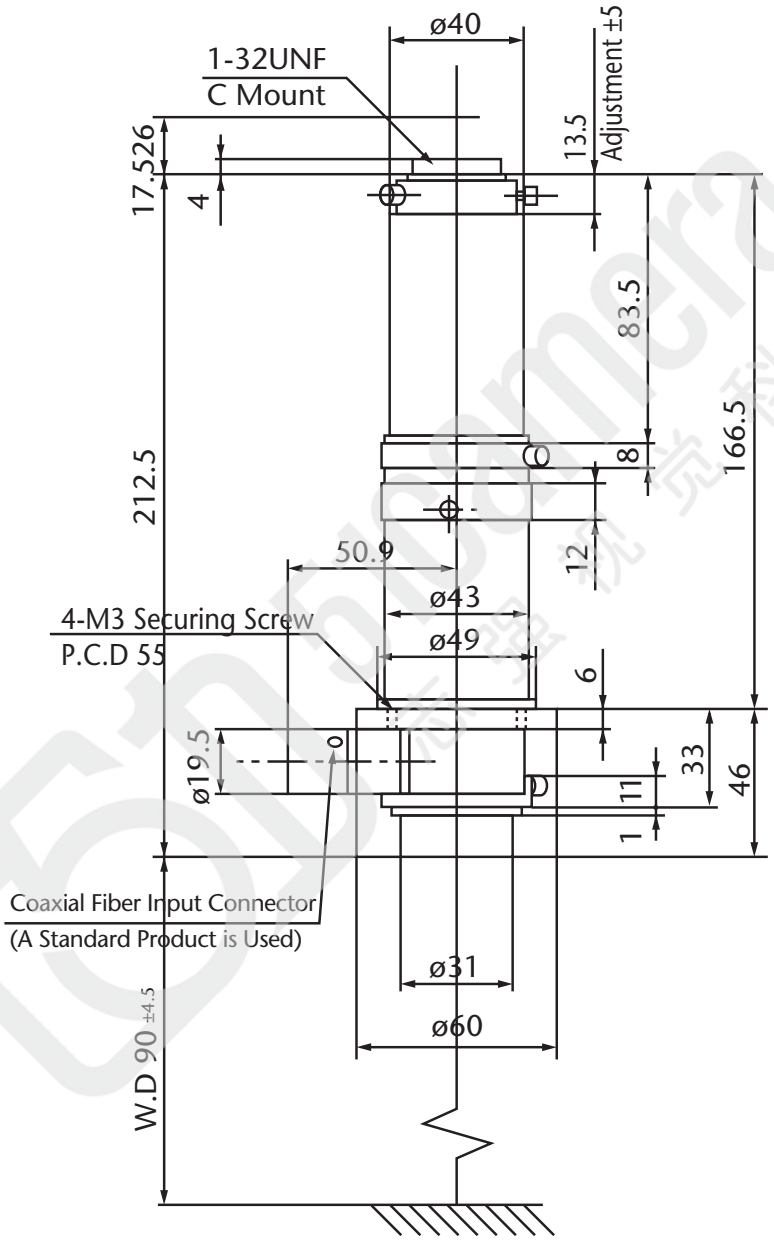

Model Name : ML-Z07545D
SCHOTT MORITEX Corporation