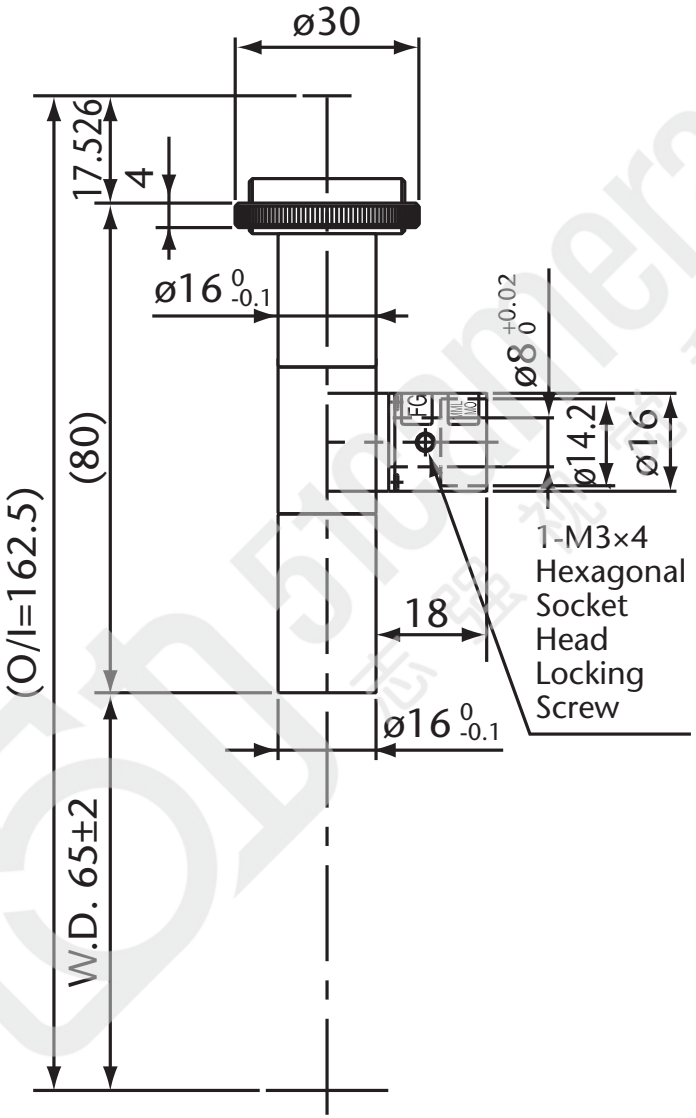


Model Name : MML1-ST65D
SCHOTT MORITEX Corporation