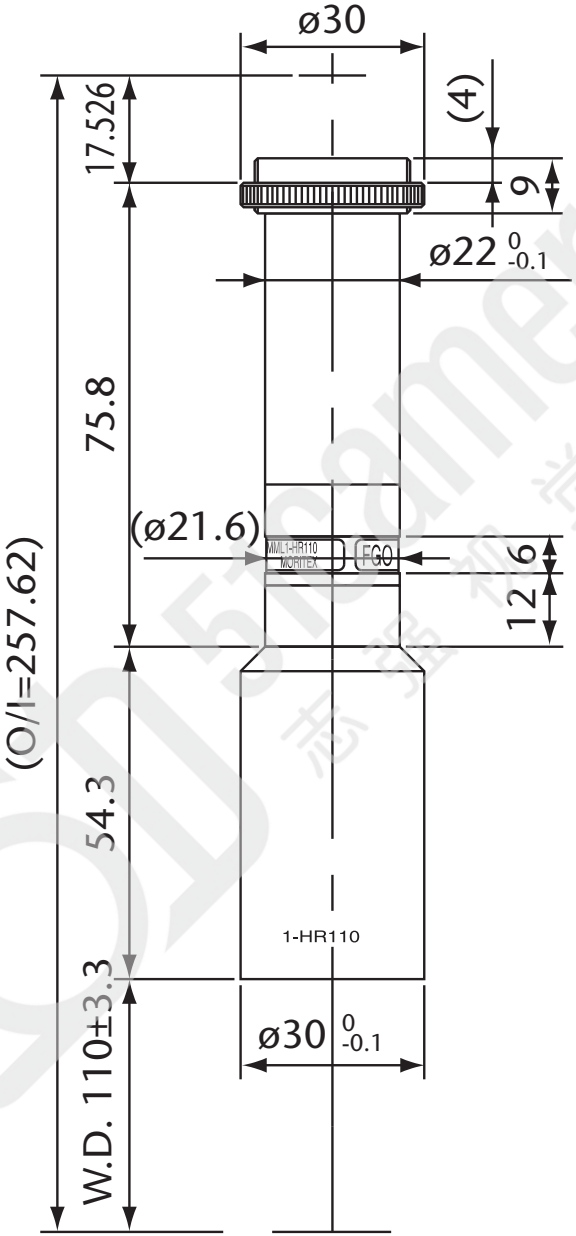

Model Name : MML1-HR110
SCHOTT MORITEX Corporation