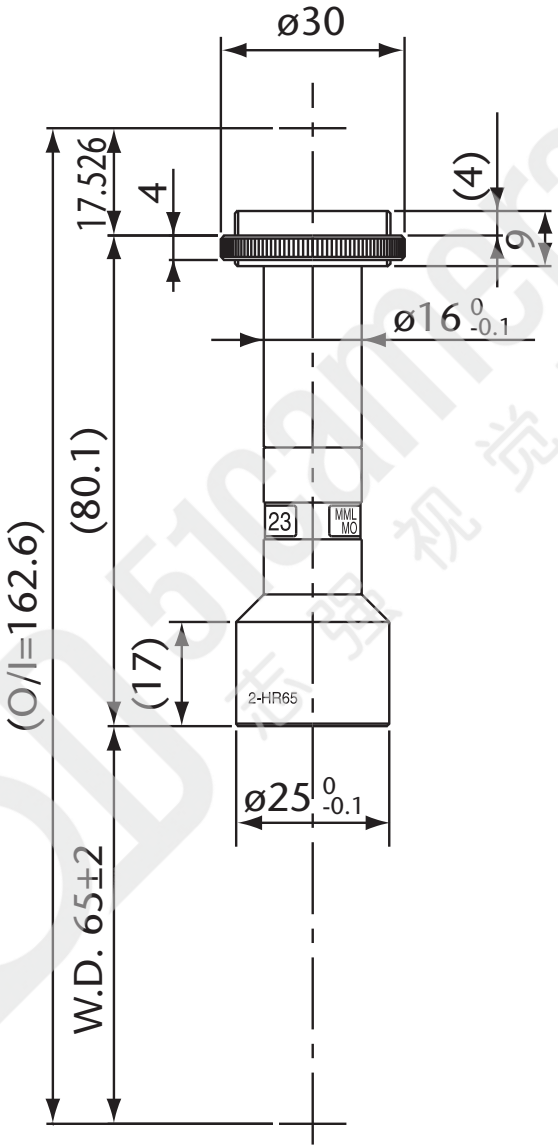

Model Name : MML2-HR65
SCHOTT MORITEX Corporation