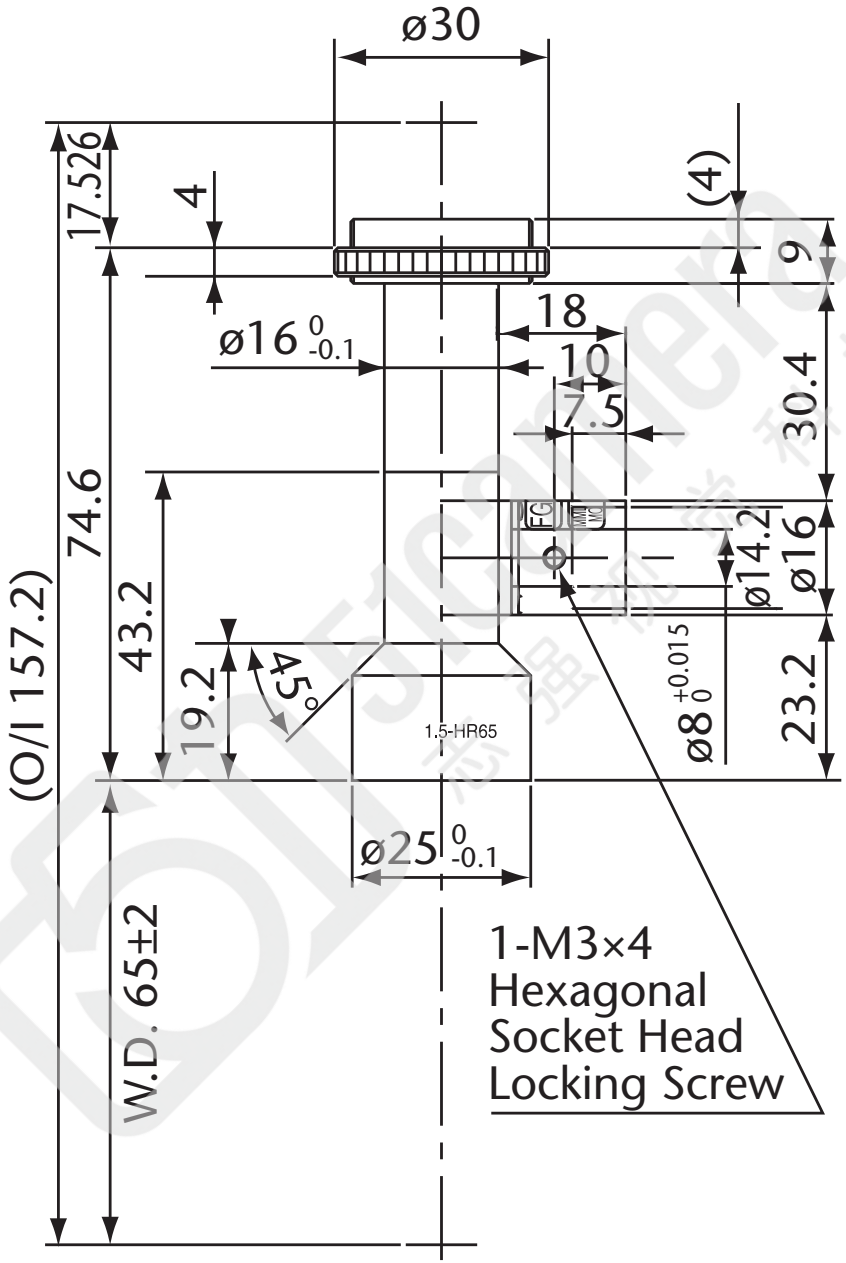

Model Name : MML1.5-HR65D
SCHOTT MORITEX Corporation