HPR-PF-150SW

Model name	HPR-PF-150SW
LED color	White
Input voltage	48 VDC max.
Peak current	36 A
Weight	270 g
Connector	ELP-09V
Polarity and signal	1: (+), 2: (+), 3: (−), 4: (−), 5: (+), 6: (+), 7: (−), 8: (−), 9: NC

Unit: mm

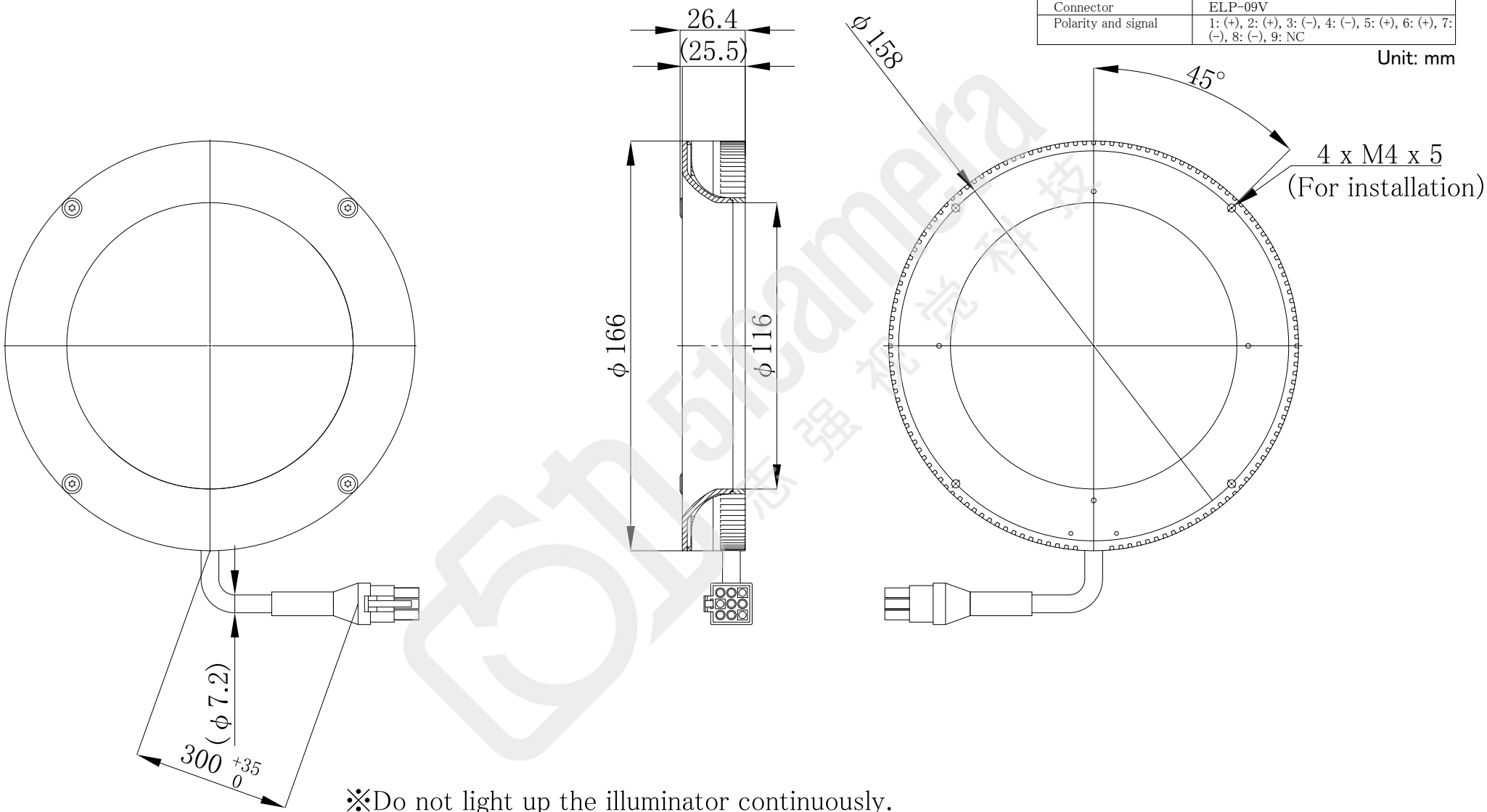

※Do not light up the illuminator continuously.
This illuminator has some restrictions for light-up condition.
Please keep strictly the duty cycle under 1% and pulse width under 500 μs.

Copyright(C) 2017 CCS Inc. All rights reserved. Reproduction or photocopy without permission is prohibited.

CCS Inc.