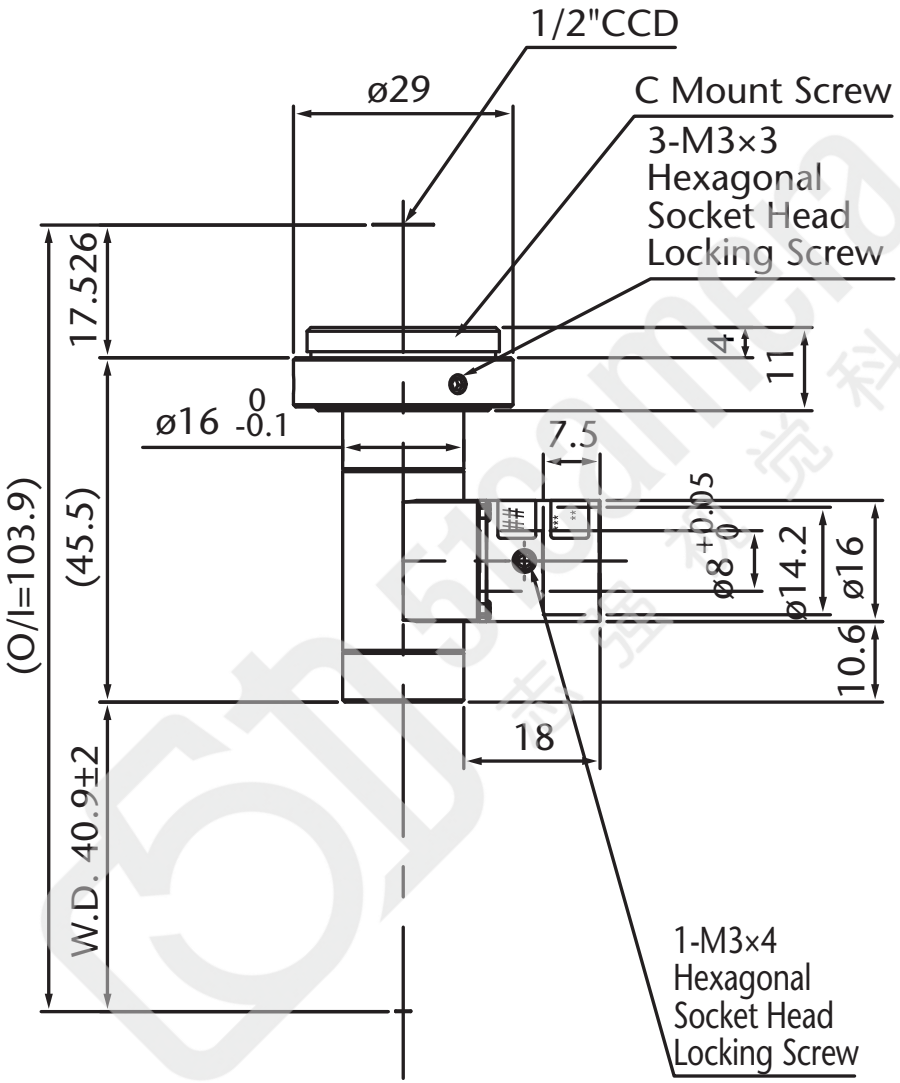

Model Name : MML4-ST40D
SCHOTT MORITEX Corporation