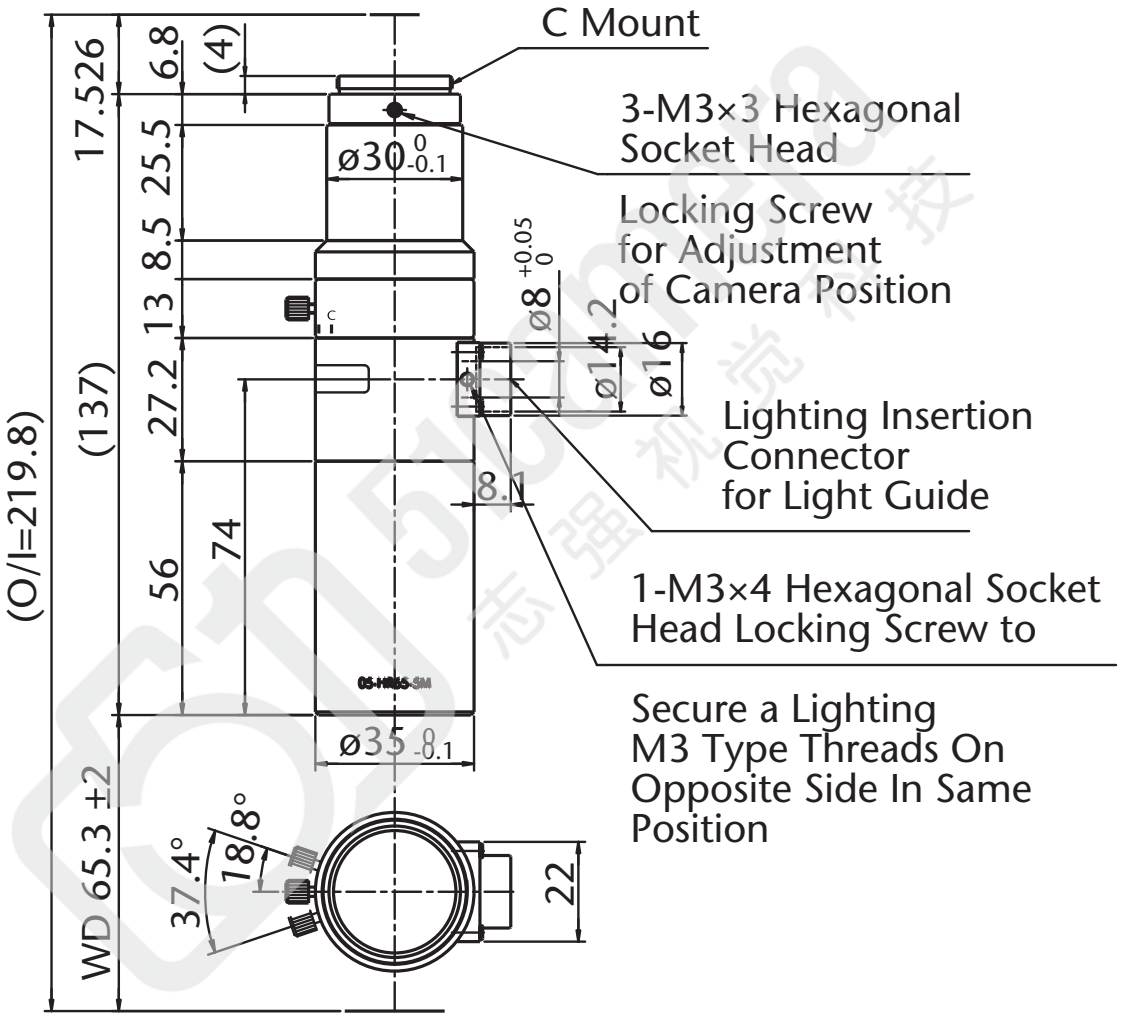

Model Name : MML05-HR65DVI-5M
SCHOTT MORITEX Corporation