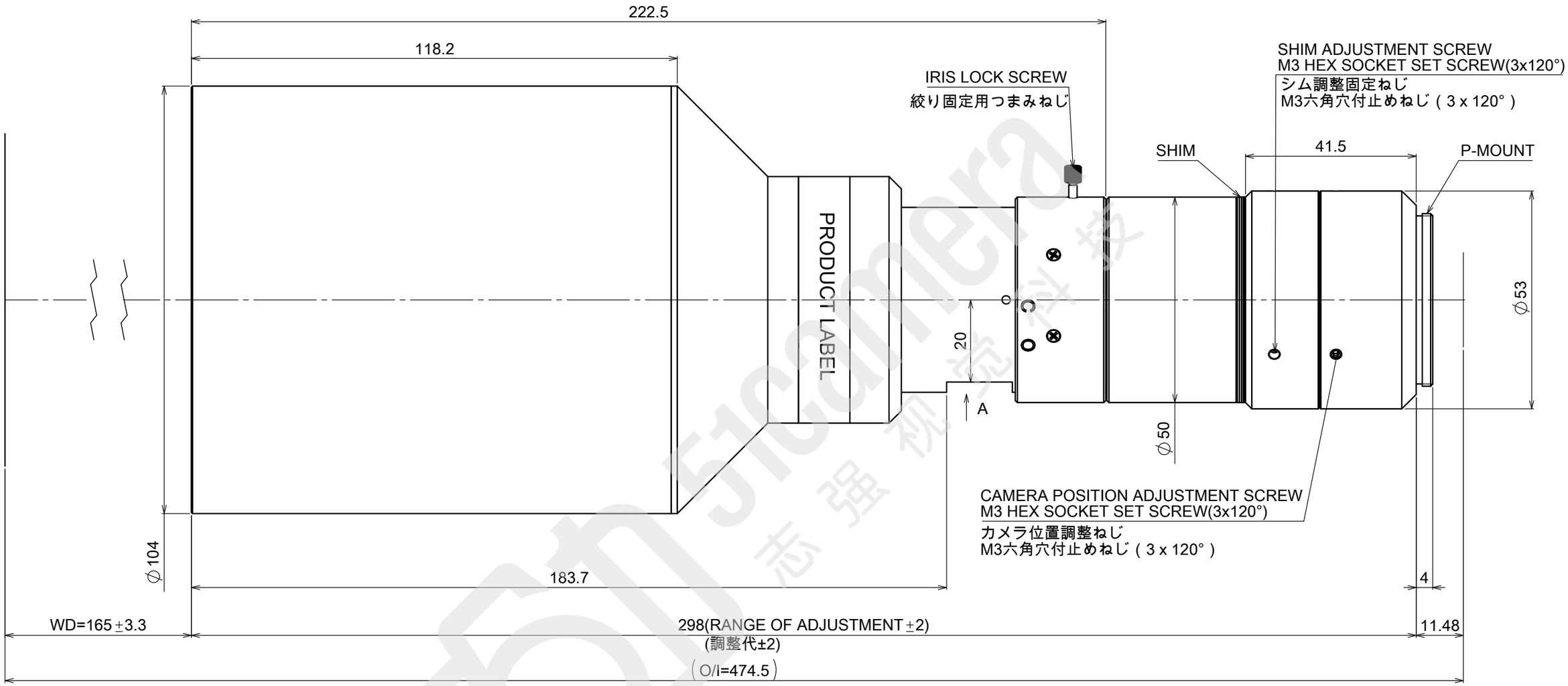

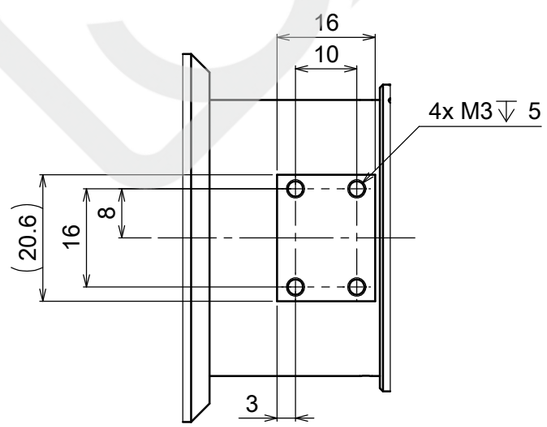

VIEW A

MAGNIFICATION:0.29X
光学倍率:0.29X

Model Name : MTL-8023P-029
MORITEX CORPORATION