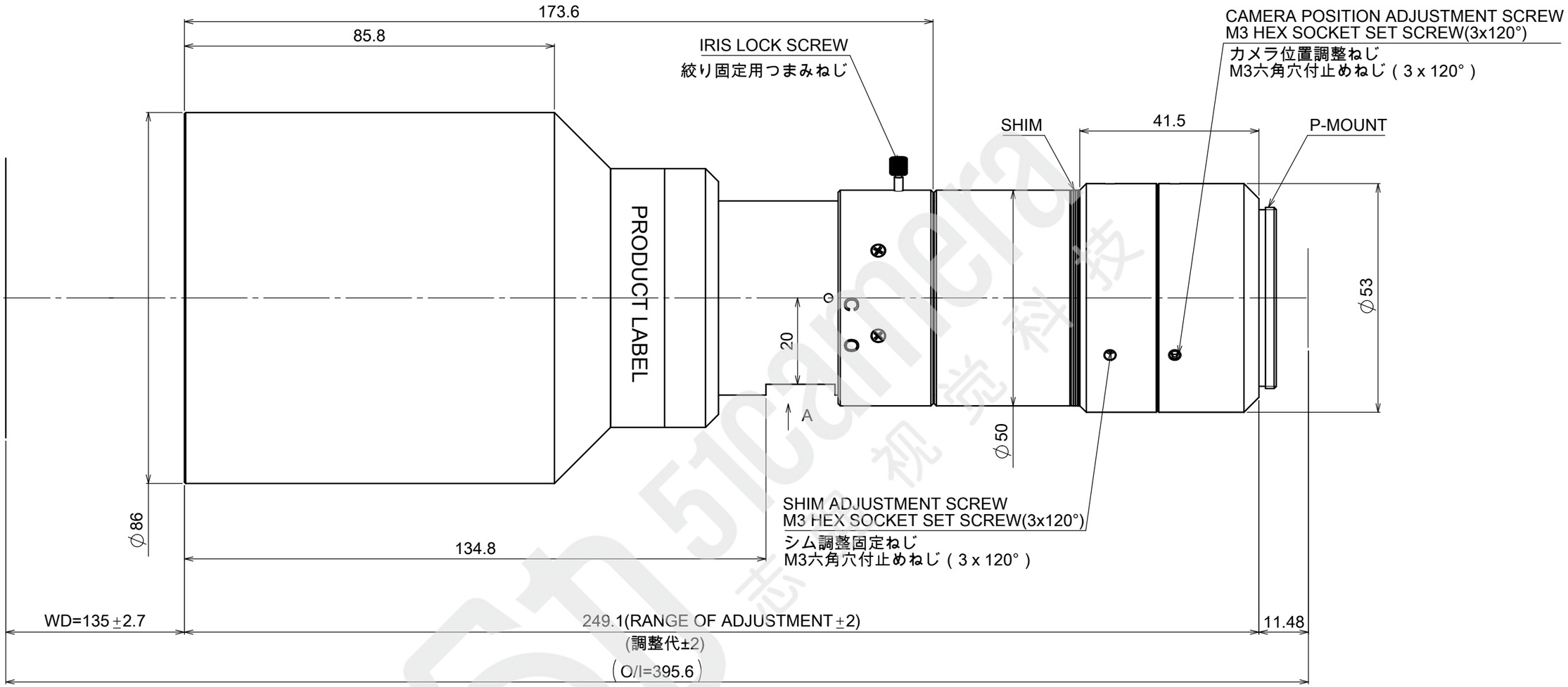

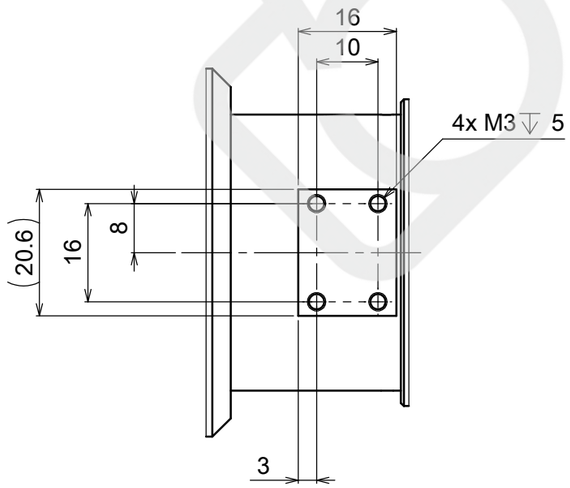

VIEW A

MAGNIFICATION:0.35X
光学倍率:0.35X

Model Name : MTL-6523P-035
MORITEX CORPORATION