VIEWORKS *Industrial Camera Drawings*

UNIT	ITEM	REVISION	1.1
mm	VC-12MX2-M/C330-FM-V1.1		'20.07.24

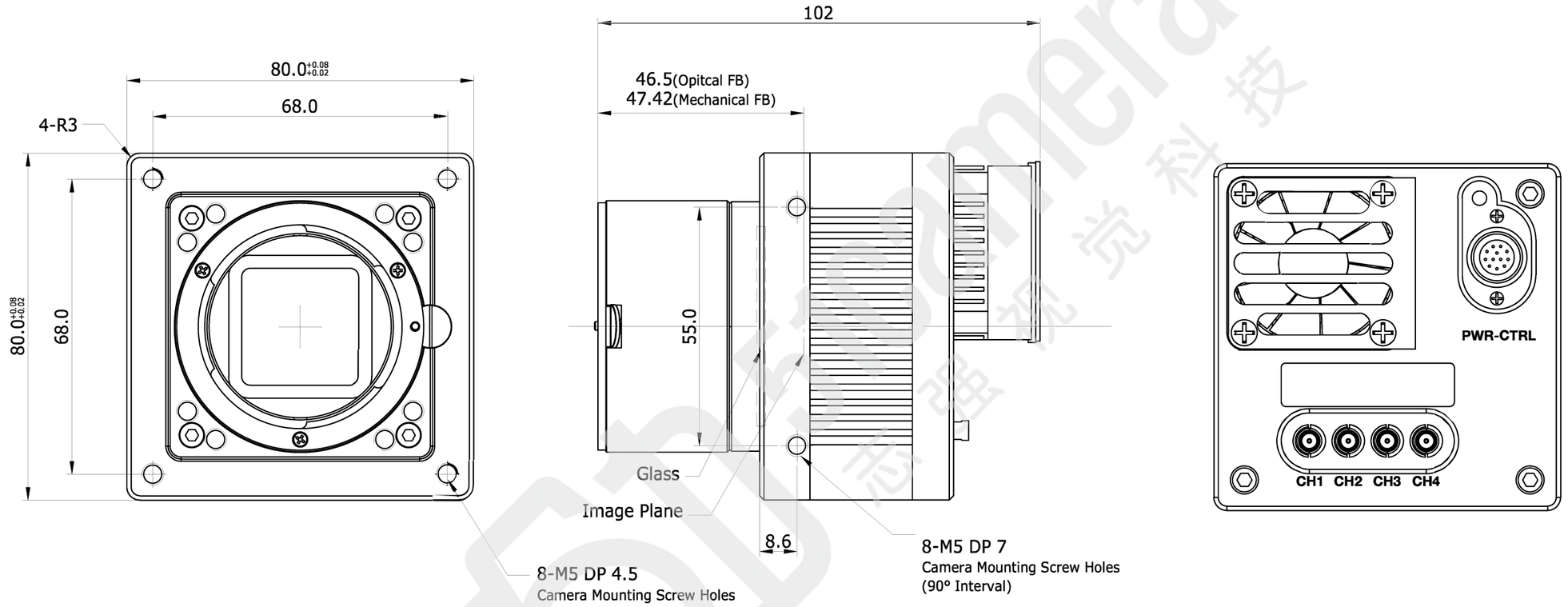

MODEL NAME	
Lens Mount: F-mount	
1	VC-12MX2-M/C330