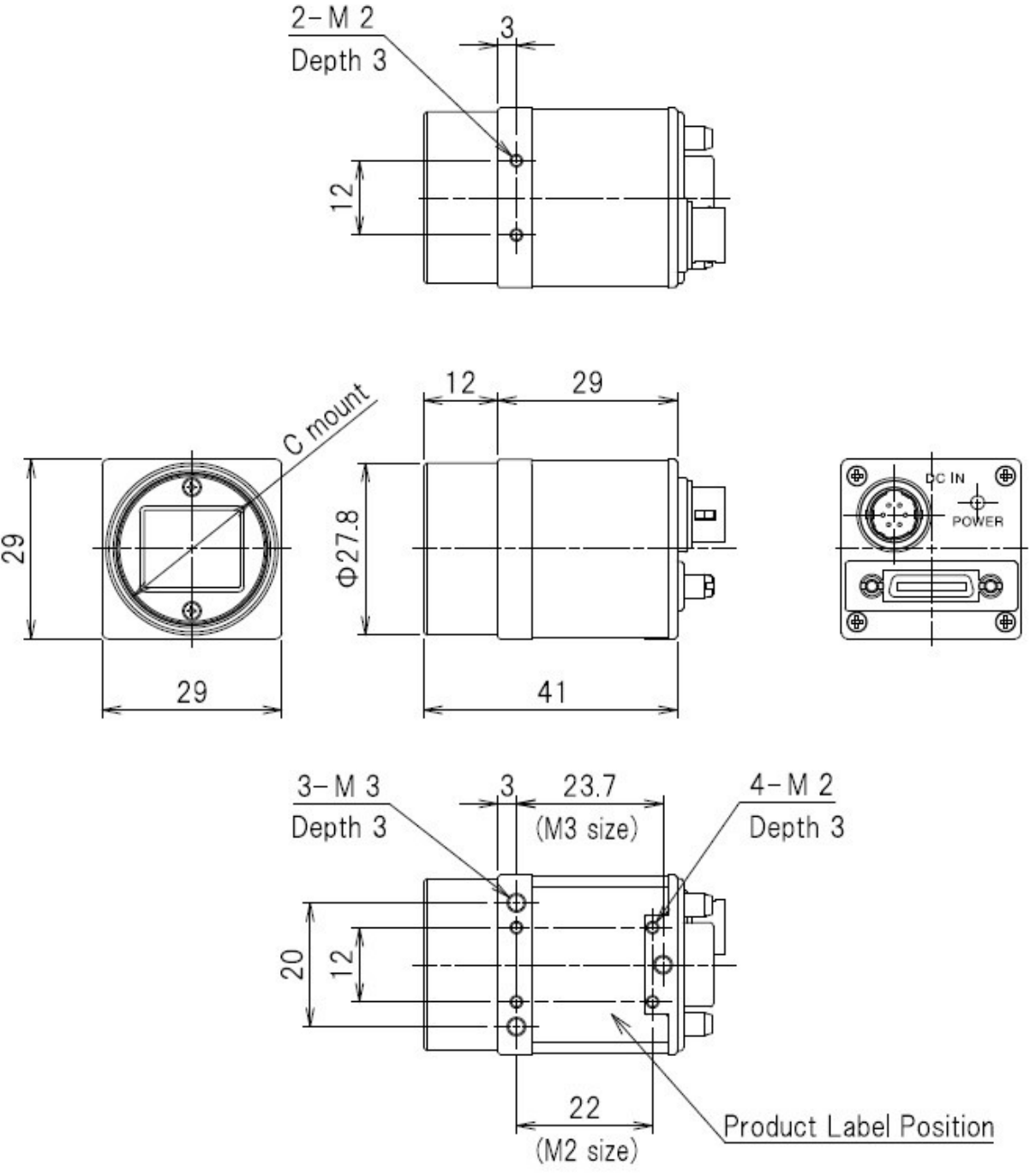
2-M 2
Depth 3
3
12
C mount
29
29
12
29
Φ27.8
41
DC IN
POWER
3-M 3
Depth 3
3
23.7
(M3 size)
4-M 2
Depth 3
20
12
22
(M2 size)
Product Label Position