Rev.	Author	Description	Date	Approved by
E	A. Bnà	Modified dimensions	18/11/2020	Ccharly

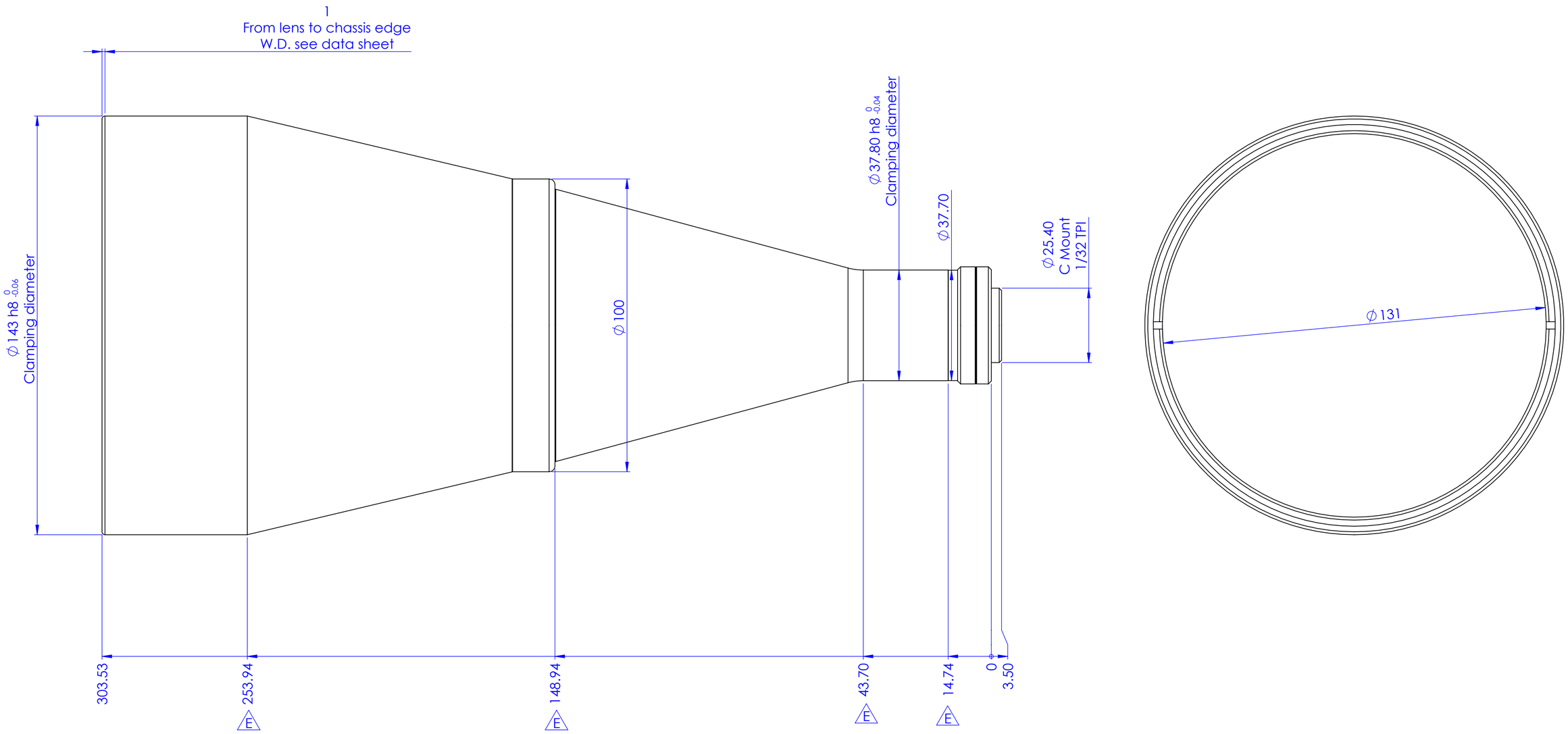

Material: N.A.		Mass: 2196.999 g	Scale: 1:2
Surface treatment: N.A.		Part No.: CO01071	
Geometrical tolerance (ISO 2768-2) Class K	Undimensioned bevels: 0.5x45°	Description: TC13096	
Linear tolerance (ISO 2768-2) Class m	Undimensioned radii: R 0.5		

	0.5 ÷3	>3÷ 6	>6÷ 30	>30÷ 120	>120 ÷400	>400÷ 1000	>1000 ÷2000	>2000 ÷4000
m	±0.1	±0.1	±0.2	±0.3	±0.5	±0.8	±1.2	±2

all dimensions are in mm

	Date	Name
Designed	20/03/2014	Santini
Drawn	04/03/2015	Rodella
Checked		

Drawing No.: DP 01071-E

Sheet: 1/1

OPTO ENGINEERING

OPTO ENGINEERING S.r.l. - Mantova Italy - Tel. +39 0376 699111 - www.opto-engineering.com

Secret and confidential - All rights reserved - No copy, dissemination or circulation is allowed unless specifically authorized in writing by OPTO ENGINEERING S.r.l. - Any violation shall be legally prosecuted.